High gradient magnetic filter

HGMF

The Metso HGMF High gradient magnetic filter provides proven highest efficiency in removing iron and copper corrosion particles from boiler condensate.
The HGMF maintains this efficiency even during heavily contaminated flows and with varying flowrates.

Design

- Increases plant thermal efficiency by processing hot condensates from high pressure boilers.
- Removes high levels of iron and copper particulates from boiler condensates during startups and upset conditions.
- Processes boiler condensates hotter than those that can be accepted by resin bed polisher systems.
- Decreases losses in condensate and heat values during production upsets.
- Reduces iron and copper particulate buildup rates in boilers.
- Increases time spans between boiler cleanings.
- Allows more hot condensates to be used during mill restarts - even during first hours.
- Reduces dependence on alternate boiler feedwater sources.
- Increases boiler availability and reliability.
- Reduces boiler cleaning and waste disposal costs.
- Treats water and oil emulsions in steel rolling plants.
- Removes corrosion products in municipal heating systems.

The filter can be used alone or in conjunction with other polishing steps. When used alone, for high pressure power and recovery boilers, the filter produces acceptable feedwater. When used in conjunction with other polishing steps, the filter significantly increases the duty cycles of these steps.

The design of the Metso HGMF filter allows it to function with high efficiency under various conditions and widely ranging flowrates.

During mill and boiler startups when high contamination is present, the Metso HGMF performs with the same high efficiency. The filter returns more condensate at higher values to the boilers than other polishing techniques can achieve and less condensate is lost to the sewer. As a result, the HGMF filter is less dependent on alternate feedwater sources.

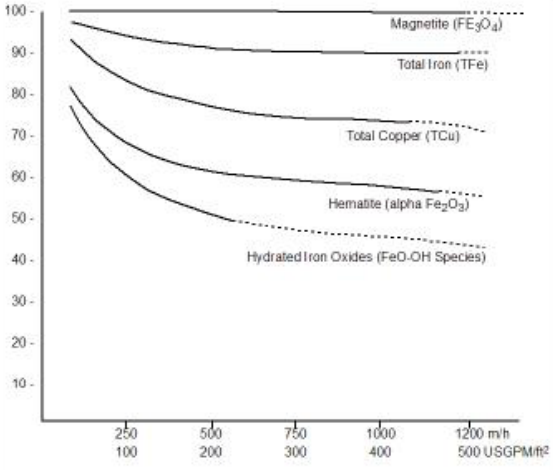

For more information, contact your local Metso representative. www.metso.com
Metso Minerals (Sweden) AB, SE-733 25 SALA. Tel: +46 224 570 00.

Applications

The Metso HGMF can polish fluids such as mill condensates at typical flow velocities of 700 to 1200 m3/h (3000 - 5000 USGPM). Even with increased pressure differentials across the filter system, higher flowrates can be treated at similar high performance levels.

The Metso HGMF will accept any flowrate up to 120 percent of the design flow and is not limited to a narrow flowrate range for efficient operation. The filter operates at a wide temperatures range and its efficiency increases with rising condensate temperature.

HGMF used in a stainless steel rolling mill

Operation

The HGMF operates by magnetizing a filamentary matrix filter bed that is contained within a pressure vessel. When the condensate flows through the filter bed, the particulate iron and copper oxides are magnetically captured and held in the filter bed until the filter is back-flushed.

The filament diameter of the HGMF matrix is small in order to create the high magnetic field gradients necessary to capture weakly magnetic corrosion particles like hematite and hydrated iron oxides, in addition to the strongly magnetic particles.

The HGMF filter bed matrix has a void volume of approximately 90 percent; therefore, when operating, the filter has a low differential pressure drop with a large holding capacity for trapped solids.

When the matrix is loaded, the Metso HGMF activates a flush cycle which is triggered automatically by a specified increase in delta P across the filter bed or by a specified elapsed time, whichever occurs first. The only flush water that is used is that volume of water contained within the filter vessel when flushed. The duty cycle will vary with the amount of magnetic material that is contained in the influent but, in general, is more than 90% of the complete cycle. The remainder of the cycle being the service time required for deactivating/activating the magnet and actuation of the various valves to flush the trapped material out of the matrix.

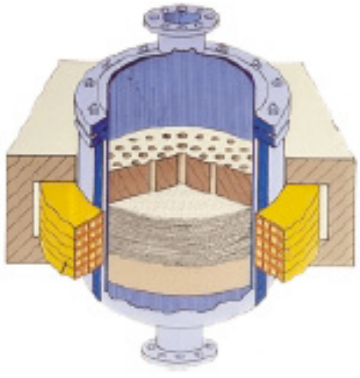

Cyclic high gradient magnetic filter

For more information, contact your local Metso representative. www.metso.com
Metso Minerals (Sweden) AB, SE-733 25 SALA. Tel: +46 224 570 00.

System

The Metso HGMF magnetic filter system consists of:

- Filter assembly
- DC power supply
- Associated valves
- Piping
- Tanks
- Instrumentation
- Automatic process controller

The filter system is shop-tested and shipped fully assembled on a support frame, and is ready for immediate installation.

Performance and capacity

The performance of the magnetic filter depends upon the characteristics of the influent to be treated and filter performance will vary a lot from application to application and is not possible to state the capacity only by machine size.

The magnetic properties of the particulates, the dilution of these particulates in the fluid, the amount of non-magnetic matter, the particle size distribution and extent of particle size range are a few of the parameters that govern the sizing of the HGMF. This is normally determined by a series of laboratory tests which provide the sizing factors such as magnetic flux density rating, matrix grade, matrix loading, pulp superficial velocity and cycle time. With these parameters, coupled with the filter duty specifications, the correct filter may be selected.

Such laboratory test are carried out in the laboratory of Metso Minerals (Sweden) AB in Sala. At times it may be advisable to verify the laboratory results by performing pilot plant tests with a larger filter.

Metso possesses a pilot filter (HGMS56-15-3) which may be rented for testing on site.

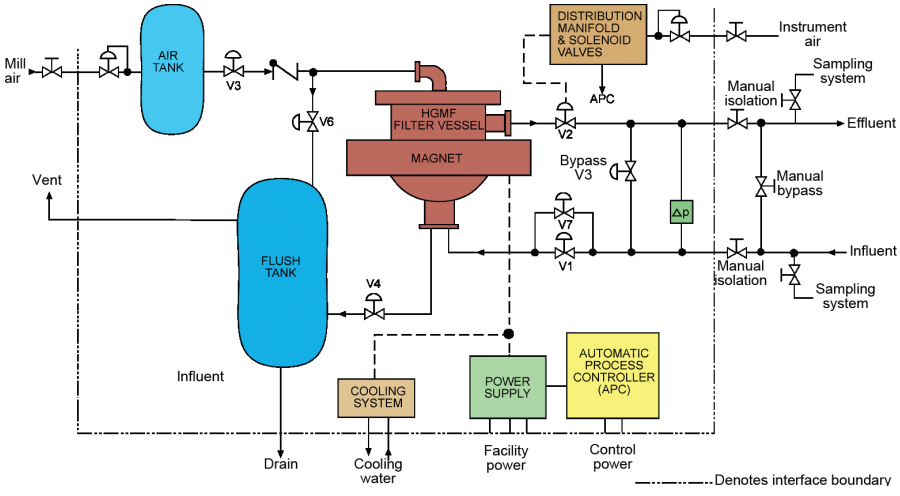

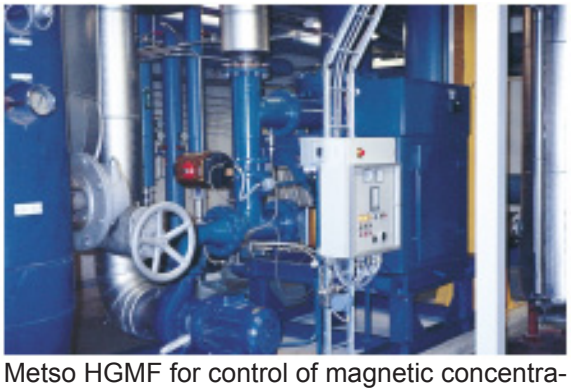

Metso HGMF for control of magnetic concentration in a district heat flow of 10.000 m³/h.

Metso HGMF in a steel mill

For more information, contact your local Metso representative. www.metso.com
Metso Minerals (Sweden) AB, SE-733 25 SALA. Tel: +46 224 570 00.

Technical data – High gradient magnetic filter system HGMF

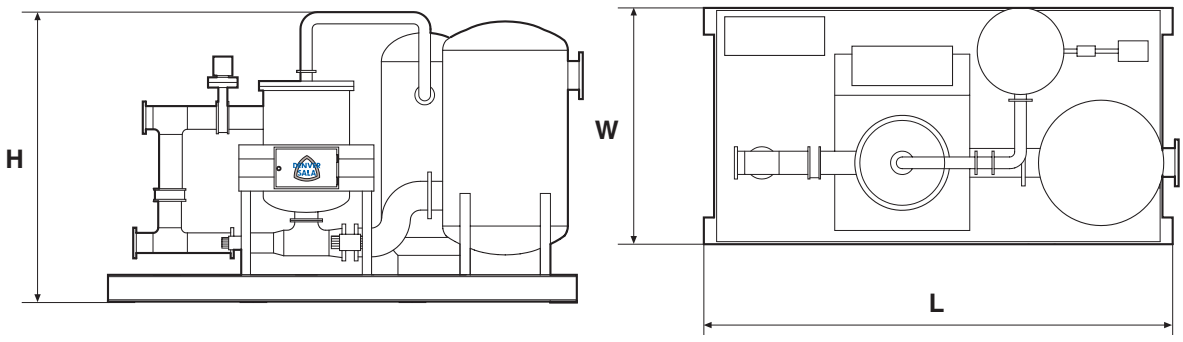

Model	H mm (ft)	L mm (ft)	W mm (ft)	Power(magnet) kW	Matrix area m² (ft²)	Cooling water m³/h (gpm)
38-15-3*	1 905 (6)	3 048 (10)	1 321 (4)	9	0.07 (0.8)	0,4 (2)
45-15-3	2 032 (7)	3 556 (12)	1 524 (5)	12	0.11 (1.2)	0,7 (3)
56-15-3	2 210 (7)	4 064 (13)	1 829 (6)	12	0.19 (2.0)	0,7 (3)
76-15-3	2 464 (8)	4 115 (14)	1 829 (6)	24	0.43 (4.6)	1,4 (6)
107-15-3	3 073 (10)	5 588 (18)	1 981 (7)	24	0.85 (9.15)	1,4 (6)
152-15-3	**	**	**	28	1.75 (18.84)	1,6 (7)
214-15-3	**	**	**	37	3.42 (36.81)	2,0 (9)

For more information, contact your local Metso representative. www.metso.com
Metso Minerals (Sweden) AB, SE-733 25 SALA. Tel: +46 224 570 00.