Metso

Sala series

Vertical froth pumps

Industry benchmark in froth pumping efficiency





Vertical froth pumps

The Metso VF froth pump has been designed to increase the pump ability of frothy slurry. The principle of operation is similar to that of hydrocyclone separation.

Air is separated from the slurry in a vortex created by the impeller rotation and the tangential inlet to the pump's conical sump. This results in more efficient pumping at higher capacities and a smooth operation, free from pulsations caused by air locking.

Summary of design features

- Integrated unit for layout flexibility
- Smooth operation of the open vortex created in the sump and vertical "wet end" inlet prevents air locking
- Cantilever design does not require submerged bearings or shaft seals
- Bearing assembly with double protection sealing arrangement to prevent ingress of slurry
- Wear parts are available in a variety of different materials
- Simplified maintenance

Sala series: Vertical froth pumps

Wear parts designed for the toughest applications

Standard pumps are supplied with parts in wear resistant Natural Rubber or High Chrome iron alloy, with a nominal hardness of 600 BHN. Other wear part materials are available, and each have large material sections for extra long wear life. Parts are fully interchangeable and can be combined for optimum life.

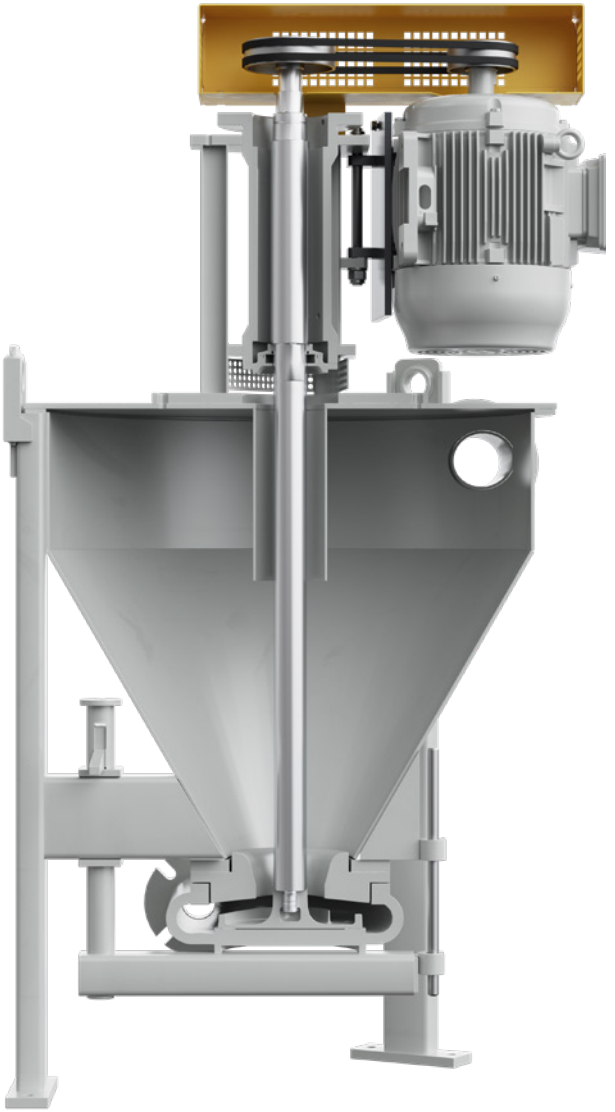

The pump, pump box and motor are integrated in one self-contained unit, with no alignment or special foundations needed. This way, they are is simple to install and connect.

The conical tank design with its tangential inlet creates an open vortex. The vertical inlet prevents air locking by allowing the separated air to rise up along the shaft and exit via the vortex finder. These pumps with rubber wear parts can run dry for short periods and the metal pumps for unlimited time.

The heavy duty pump shaft is a cantilever design, hanging below the bearing housing. There is no submerged stuffing box, bearings or shaft seals. This design ensures minimum maintenance and eliminates any requirement for water flushing.

The pump shaft is carried in grease lubricated anti-friction bearings. Impeller clearance is maintained by external axial adjustment of the shaft/bearing assembly. Bearings have double protection seals against the ingress of slurry. Pumps are supplied with drive guard. V-belt drive and motor are supplied as options. The motor is mounted vertically, with shaft up, on an adjustable motor plate fitted above the tank top, alongside the bearing housing.

The casing on the VF Froth Pump is supported by a beam. The beam is either lowered by hand or a hydraulic jack, depending on the pump size. The beam can be turned out so that the “wet end” parts can be accessed by a lifting device.

Efficient froth pumping

A centrifugal pump is, in general, a very inefficient air pump. Its performance is drastically affected by air containment in liquids. The concept behind the conical froth pump is to avoid pumping air and to separate as much air as possible from the slurry before it reaches the pump impeller.

Typical installations
The VF froth pump is ideal for all applications involving handling of air entrained slurries, such as flotation froth in base metal concentrators, phosphate and apatite washing plants and calcium carbonate upgrading plants.

The pump can also be used as a mixing and distribution unit, where dry powder has to be mixed (and wetted) with water. It can also be used with cement in ready mixed concrete and for grouting and injection mixing.





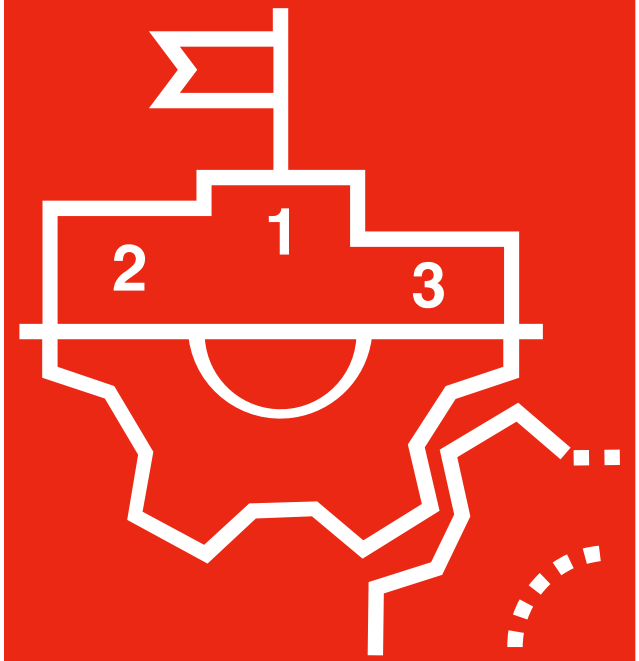

Increase the efficiency of your pumping frothy slurry



Less maintenance

No submerged stuffing box, bearings or shaft seals. Design ensures minimum maintenance and eliminates any requirement for water flushing.

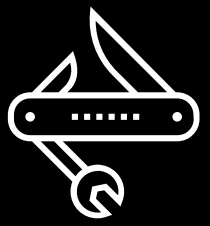

Diverse applications

Flotation froth pumping. Phosphate and apatite washing plants. Calcium carbonate upgrading plants. Mixing and distribution units. Cement plants.



Increased efficiency

More efficient pumping at higher capacities and a smooth operation, free from pulsations caused by air locking.

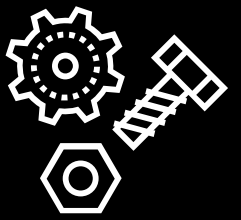

Robust wear parts

Extra-long wear life. Parts in different materials are fully interchangeable and can be combined.

Flexible and versatile operations

Options

- "Wet end" materials: Natural Rubber, Chloroprene, Chlorobutyl, High Chrome Iron, 316 Stainless Steel, CD4MCu
- Rubber lined tank and shaft for wear and corrosion protection

Motor size

Motor size and V-belt drive vary with the pump application. Minimum data required for an approximate pump, speed and drive motor selection:

- Slurry flow rate and type of froth
- Slurry density
- Total discharge head

Other pump products

- XR, HR, MR Rubber Lined Pumps
- XM, HM, MM Hard Metal Pumps
- VS, VSHM, VSMM Vertical Sump Pumps
- VT Vertical Pumps with integrated Tank

Sala series: Vertical froth pumps

Pump dimensions

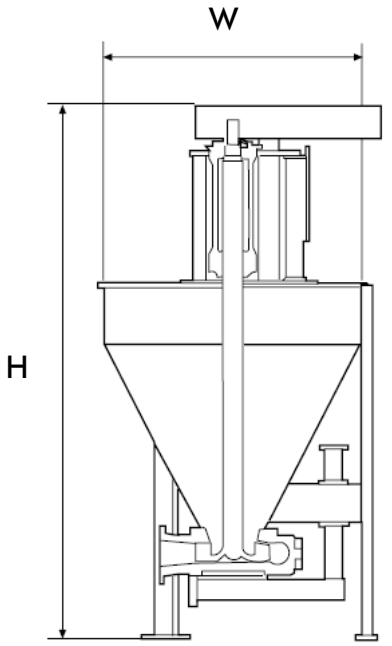

Broad spectrum with the **smallest** VF pump weighing **355kg** and **1.6m tall**, while the **largest** is **5555kg** and stands at **4.5m tall**

Technical specifications

	Pump discharge*		Height		Width		Weight**		Tank volume	
	mm	inch	mm	inch	mm	inch	kg	lb	m^3	USG
VF50	50	2	1 600	63	800	31	355	783	0.14	37
VF80	80	3	2 250	88	1 000	39	605	1 334	0.37	98
VF100	100	4	2 700	106	1 400	55	975	2 150	0.82	217
VF150	150	6	2 700	106	1 400	55	1 095	2 414	0.82	217
VF200	200	8	3 760	148	1 850	73	2 700	5 952	2.30	607
VF250	250	10	3 760	148	1 850	73	2 900	6 392	2.30	607
VF350	350	14	4 500	177	2 150	85	5 555	12 245	3.50	925

*VF50 = Vertical Froth, 50mm (2 inch) discharge size.
** Weight figures are for metal parts. For rubber parts reduce weight by 10%.

Metso is a frontrunner in providing sustainable technologies, end-to-end solutions and services for the aggregates, minerals processing and metals refining industries globally. By helping our customers increase their productivity, improve their energy and water efficiency and environmental performance with our process and product expertise, we are the **partner for positive change.**

metso.com

Visit the webpage here to learn more about the Sala series Vertical froth pumps:

Metso

© 2023 Metso Corporation. All trademarks and registered trademarks are the property of their respective owners. 4816-12-22-EN-WNG