Metso

Valves and process flow control

Metso valves

Enhanced capabilities and specialized solutions





The Metso and Jindex story

With the recent acquisition of Australian-based company Jindex Pty Ltd, Metso welcomes an innovative leader in valves and process flow control solutions. This collaboration brings together Metso's robust expertise in slurry handling with Jindex's specialized valve technology, enhancing the capabilities Metso offers to industries worldwide. As the two companies merge their strengths, this provides customers with an expanded range of high-performance solutions that emphasize quality, reliability, performance and efficiency.



Enhanced market leadership and specialized capabilities
Established in 1995, Jindex brings decades of expertise in developing patented valve technology and process control equipment. Recognized internationally, Jindex has delivered solutions that cater to both local and global industries, and are accredited to ISO9001:2015 Quality Management Standards.

Now working together, Metso further demonstrates its leadership in the mining and slurry handling markets, enriching its slurry valve offering and increasing its ability to meet diverse customer needs through an expanded portfolio of advanced, dependable solutions.

Improved efficiency
The combined portfolio means that customers can expect improved efficiency through a one-stop solution for slurry handling, with every component designed to work seamlessly together.

By adding high-performance valves to Metso's comprehensive slurry handling systems, Metso enhances its capacity to offer tailored, efficient solutions to overcome any specific site needs.

Global expansion and diverse solutions
This partnership signifies an advancement not only in technology but also in expanded reach. With Metso's global network, the valve product lines will gain greater accessibility worldwide, supported by Metso's extensive aftermarket services and lifecycle support.

We are commited to delivering value through innovation, quality and an expanded global footprint. Combining Metso's extensive experience and offering in slurry handling, hydrocyclones and minerals processing equipment solutions with a valve offering further strengthens Metso's capacity to provide more comprehensive slurry handling solutions for the many industries it supplies to. A win for everybody!

The Metso difference

With Metso valves, we're committed to making your work easier by combining deep process knowledge with advanced valve expertise. Whether over the phone or on-site, our team challenges traditional approaches as opposed to copying tired industry norms, aiming to exceed standard industry practices. We prioritize technical precision in valve selection, reduced maintenance needs, and minimized costs to ensure your project's success.

- We offer expert process flow control, not sales gimmicks
- As valve designers and manufacturers, we hold multiple patents in valve technology
- We collaborate directly with you to ensure the right valve at the lowest cost in each process duty
- With both local and international distribution, we supply a full range of valves and control systems, from individual components to complete project packages
- We prioritize swift manufacturing and sourcing to meet short or urgent delivery timelines
- In addition to standard valve types, our in-house team specializes in designing customized solutions for challenging applications and unique operating conditions





Research and development

- We challenge industry norms by favoring simplicity in design, believing that straightforward solutions are often the best
- Our passion lies in developing smarter, more efficient, and highly effective flow control technologies across all elements of valve technology
- Our facilities feature state-of-the-art assembly and testing capabilities, enabling us to create and test new designs
- Beyond standard Quality Management System requirements, we perform comprehensive testing and analysis on all designs before production, ensuring the highest standards for each product

Wear life and flow control innovations

Since its founding, Jindex has pioneered innovative solutions in process flow control, creating equipment that solves real customer challenges. Our first patented product, a pinch valve that could change the wear sleeve without removing the valve from the pipeline, was a breakthrough designed to address wear issues in process applications. This innovation marked the beginning of a strong tradition: creating practical, purpose-driven solutions that enhance operational efficiency.

Today, Metso continues to lead with multiple patented products in development. Our focus on innovation has resulted in a range of specialized products and improvements across standard valve types.

Our innovations include:

- **Ceramic chunk valves**
- **Dart valves**
- **Pinch valves**
- **Knife gate valves**
- **Check valves**
- **Pneumatic actuators**
- **Pinch valve sleeves**

We're always eager to address unique process challenges and welcome the opportunity to develop solutions where traditional valves fall short. If your processes face issues beyond standard solutions, reach out to Metso—we're here to innovate for you.

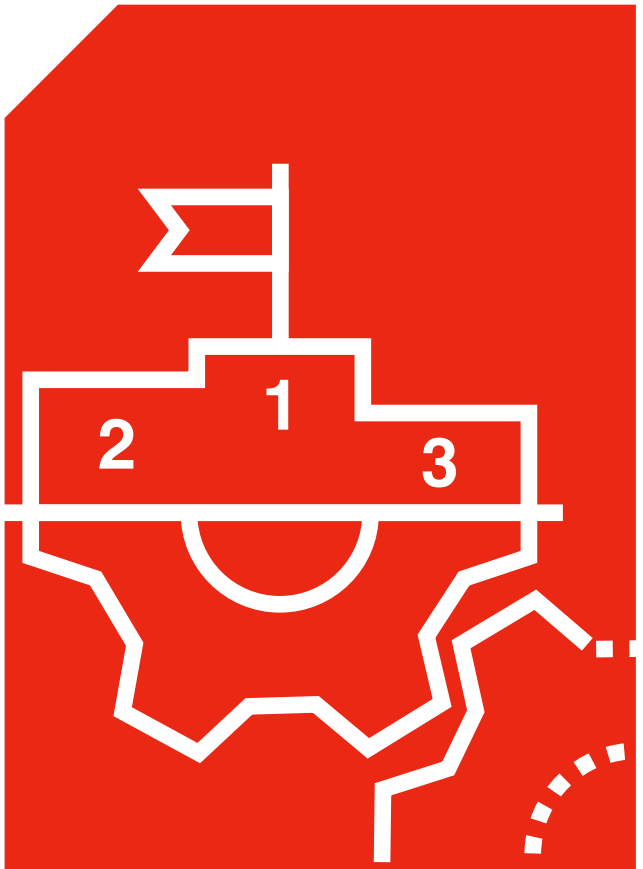

Better technical valve selection, lower capital cost and reduced maintenance costs

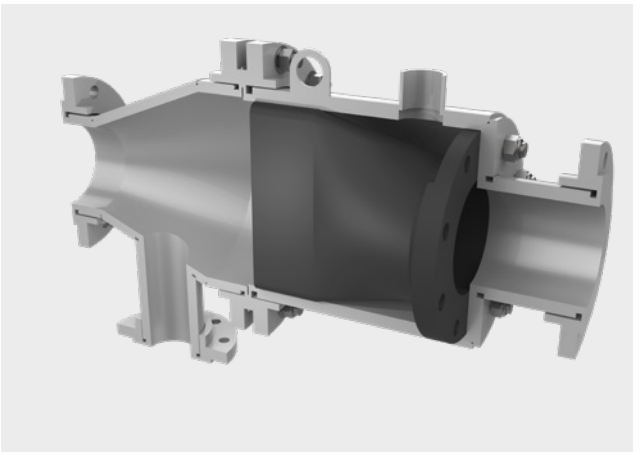

Duckbill slurry check valve



Ceramic chunk valve



Products

Valves
- Pinch valves
- Pinch nozzle valves
- Dart valves
- Lime valves
- Check valves
- Ceramic chunk valves
- Hopper valves
- Knife gate valves
- Pressure air release valves
- Duckbill rubber check valves
- Gate valves
- Air release valves
- Slurry check valves
- Tailings valves

Other products
- High wear spigots & spools
- Rubber mining hoses

Pinch valve sleeve range
Extensive stock range and replacements for most brands.

- Full bore
- Reduced bore
- Cone sleeves
- Variable sleeve wall thickness
- Wear detector sleeve
- Vacuum duty sleeves

Typical types of elastomer:
- Natural rubber
- Butyl
- Nitrile
- Neoprene
- ReoThane
- Hypalon

Site services
- Onsite commissioning
- Onsite shutdowns
- Onsite trouble shooting
- Valve audits

Industries
- Mineral processing
- Power generation
- Desalination
- Waste water
- Cement
- Oil and gas
- Aluminum refining
- Sand and gravel
- Food
- Pulp and paper
- Oil sands
- Foundry and pneumatic conveying





Results speak for themselves

Examples of our day to day customer support



A custom designed ceramic chunk valve signif-icantly contributes to plant tonnages and reported revenues



Metso filter feed pinch valve: The perfect fit, with a longer life

High wear rate application

The chunk valve

Site challenge

The site had a milling circuit flow with particle size up 10 mm including scats, 70% solids and flow velocity 15 m/s through a pinch valve. Pinch valve sleeves were being replaced every 3 weeks. This was far longer than traditional metal valves, however the site needed maintenance to occur during programmed shutdowns every 12 weeks.

Valves solution

Custom designed and built a ceramic chunk valve which could handle the extreme circuit flow. Maintenance now occurs every second planned shutdown: 24 weeks. The increased availability of the plant contributes significantly to plant tonnages and reported revenues.

Increased plant operations (less maintenance downtime) from 3 weeks to 24 weeks.

High cycle application

The filter pinch valve

Site challenge

An engineering company specified slurry knife gate valves as the control valves on five concentrate filter presses each with a cycle time of 20 mins. A complete valve replacement was necessary every 3 months, caused by one sided line pressure bending the valve gate and seals being torn/pulled out due to concentrate build-up on the gate.

Valves solution

A site valve audit revealed this less than ideal valve selection and a successful trial of our filter feed pinch valves followed. The original valves which have now been replaced with a Metso filter feed pinch valve have a life of at least 2 years. Only the Metso valve sleeves need replacing which occurs during planned downtime.

Reduced replacement time from 1 hour and 2 fitters, to 10 minutes and 1 fitter.

Metso is a frontrunner in sustainable technologies, end-to-end solutions and services for the aggregates, minerals processing and metals refining industries globally. We improve our customers' energy and water efficiency, increase their productivity, and reduce environmental risks with our product and service expertise. We are the **partner for positive change.**

metso.com

Metso

© 2024 Metso Corporation. All trademarks and registered trademarks are the property of their respective owners. 5247-10-24-EN-MNG.