metso

FREEPORT-MCMORAN COPPER & GOLD

→ www.procemin.com

Procemin 2013

10th International Mineral Processing Conference

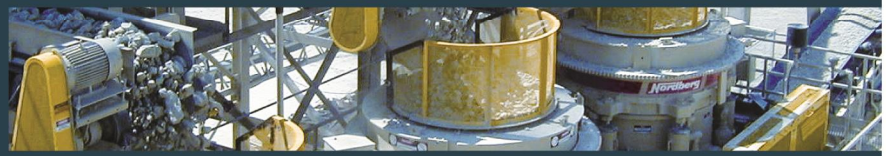

HRC™: taking HPGR efficiency to the next level by reducing edge effect

Brian Knorr – Metso
Victoria Herman – Metso
Devon (Harman) Whalen – Freeport-McMoRan Copper & Gold

fcfm Ingeniería de Minas FACULTAD DE CIENCIAS FÍSICAS Y MATEMÁTICAS UNIVERSIDAD DE CHILE

GECAMIN Conferences for Mining

Introduction to HPGRs

Operating principles:

- Two counter-rotating tires (one fixed and one floating)
- Hydraulic cylinders apply force to the floating tire
- The counter-rotating tires draw in a bed of material
- This bed of material is crushed via inter-particle comminution

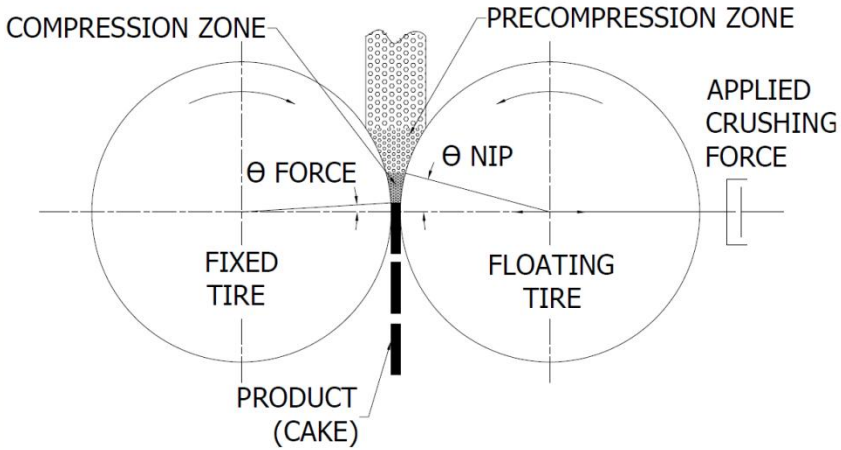

Industry Use of HPGR Technology

- Industry trends
  - Lower ore grades: more processing for less product
  - Rising energy costs: deposits more remote, power transmission or generation is more expensive
  - Finer liberation sizes
- Sites looking to energy efficient technologies to stay profitable
- Gradual acceptance of HPGR as viable technology option

Edge Effect

Edge Effect is the impaired comminution performance at the edges of the HPGR tires due to a reduction in crushing pressure.

This results in:

- Coarser product size
- Uneven wear on the tire surface
- Decreased energy efficiency

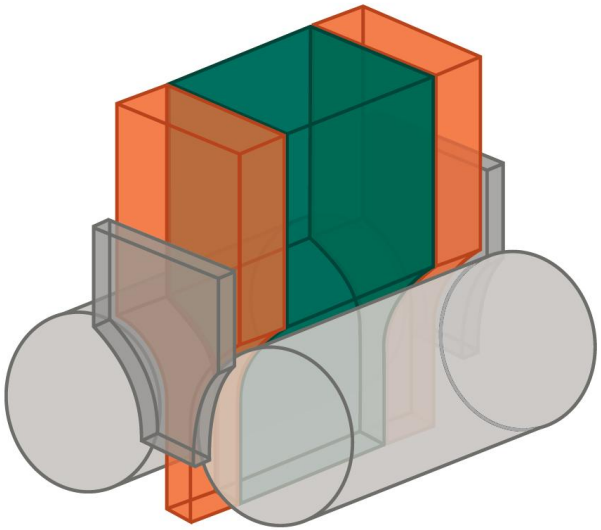

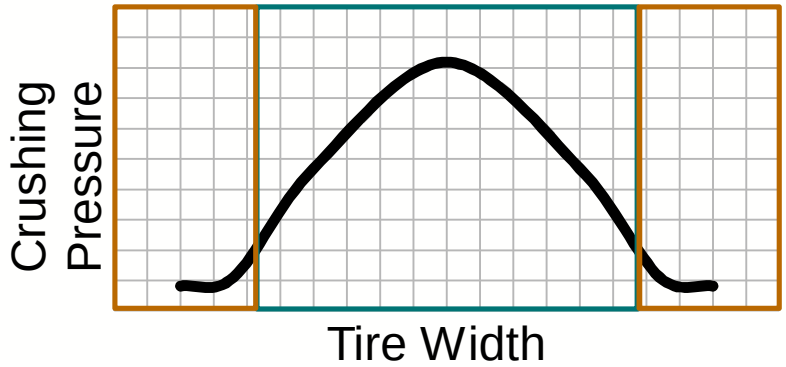

Comparison of HPGR Tire Designs

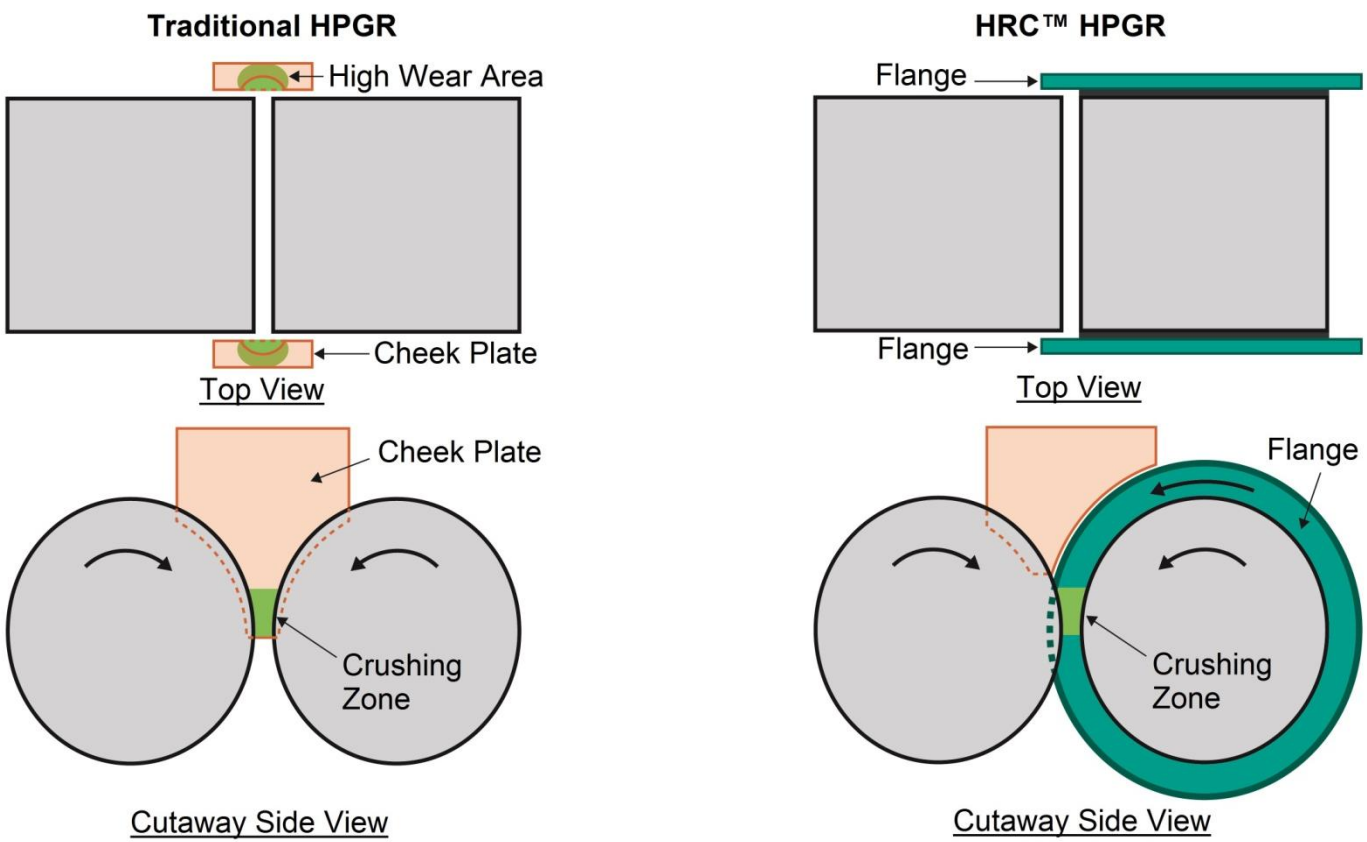

Comparison of HPGR Tire Designs

Proposed advantages of flanges:

- Moving with the material through the crushing zone
- Higher crushing forces at the tire edge
- Greater total wear surface area utilized at high wear crushing zone

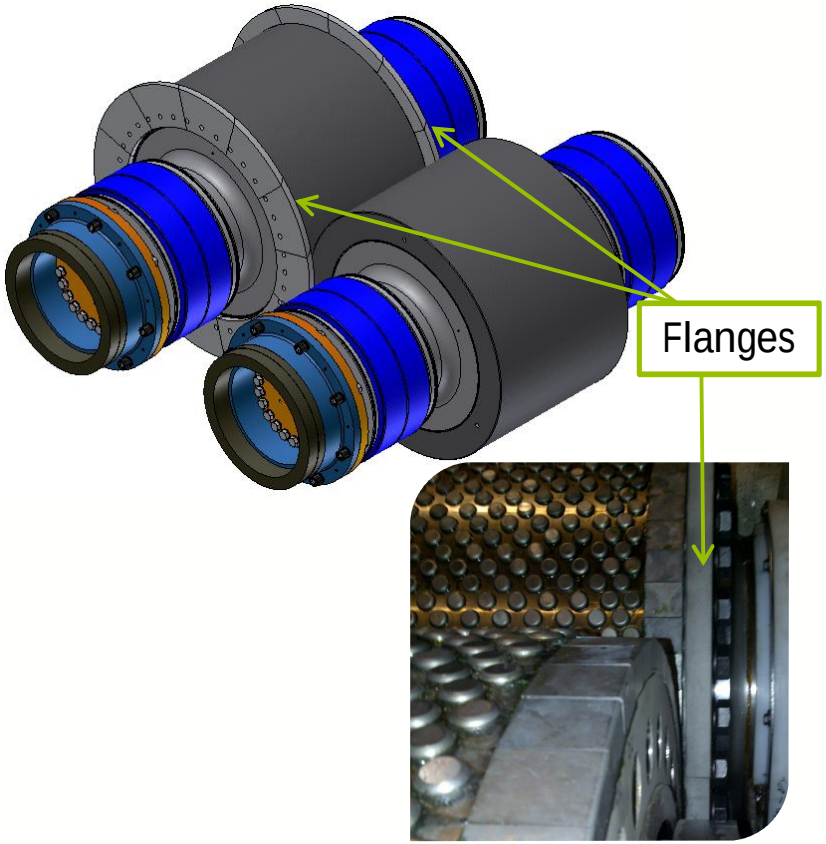

Traditional HPGR

Segregated feed = Uneven gap setting

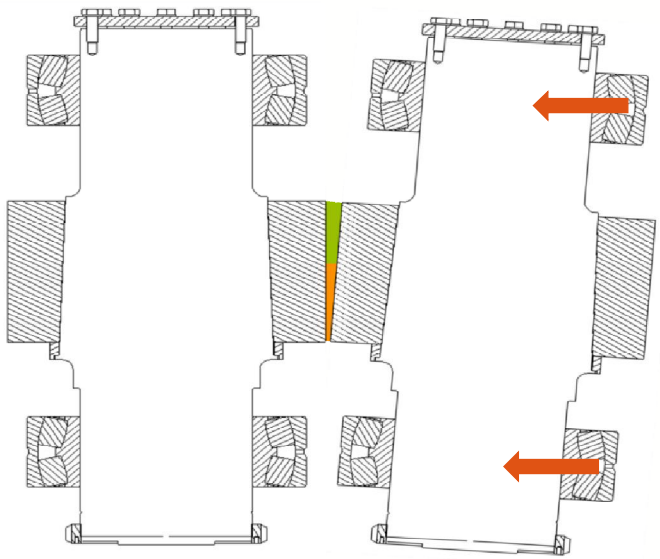

Metso's HRC™ HPGR

Segregated feed = Even gap setting

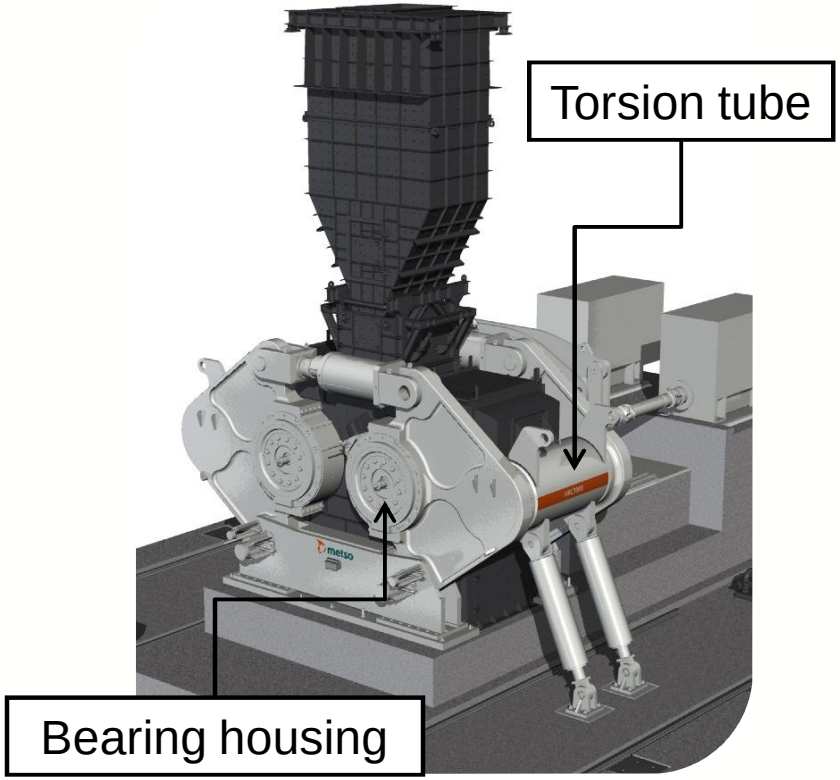

HPGR Pressure Profile

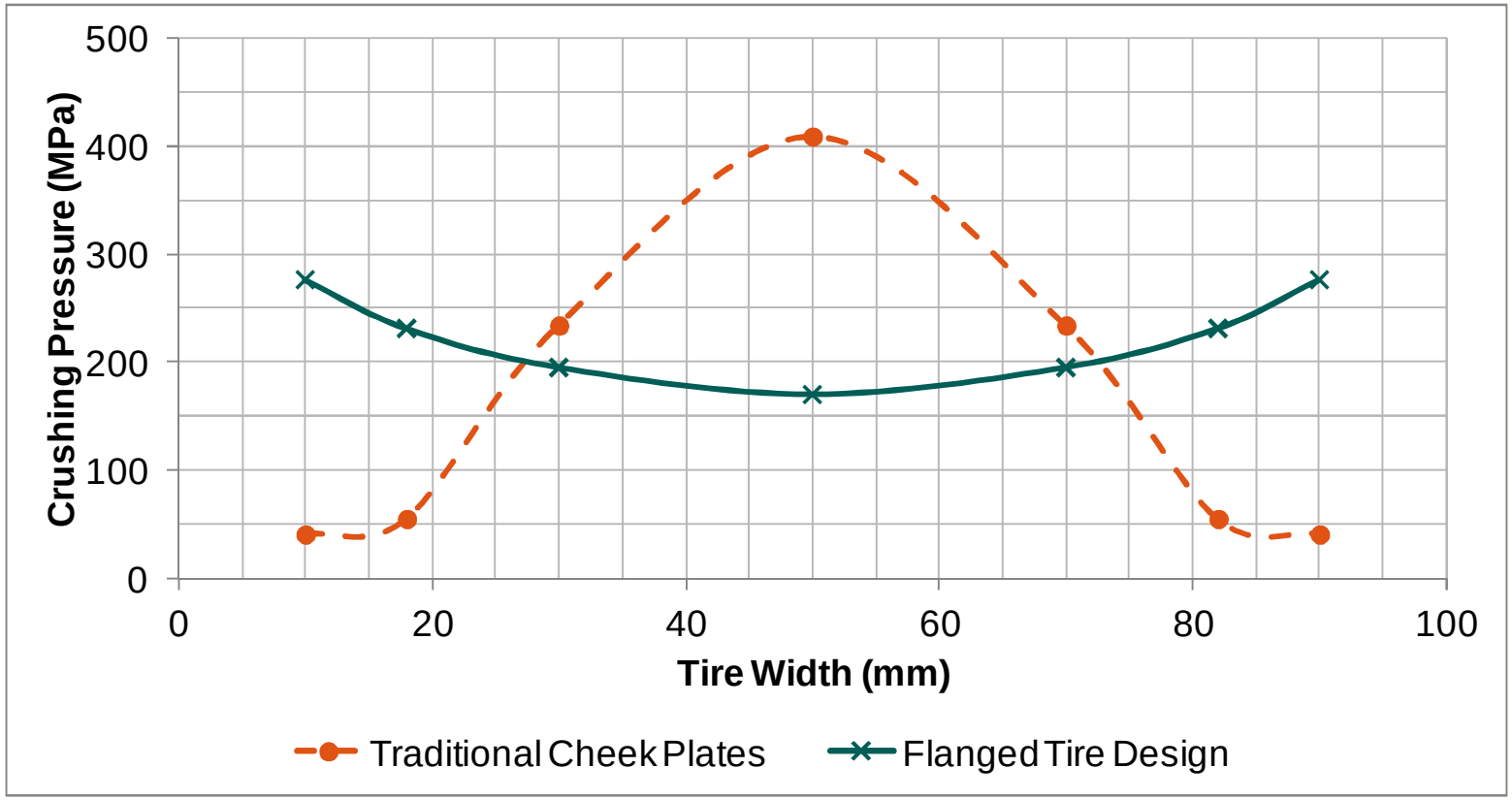

Morenci Pilot Plant

A collaborative research & development program between Metso and Freeport-McMoRan Copper & Gold.

Major Equipment:

- Metso HRC™ HPGR
- Metso VTM-650-WB Vertimill
- 10’ x 10’ Horizontal Ball Mill

Operating Hours*	Processed Tons *	Process Surveys	Controlled Process Variables
9,500	530,000	114	11

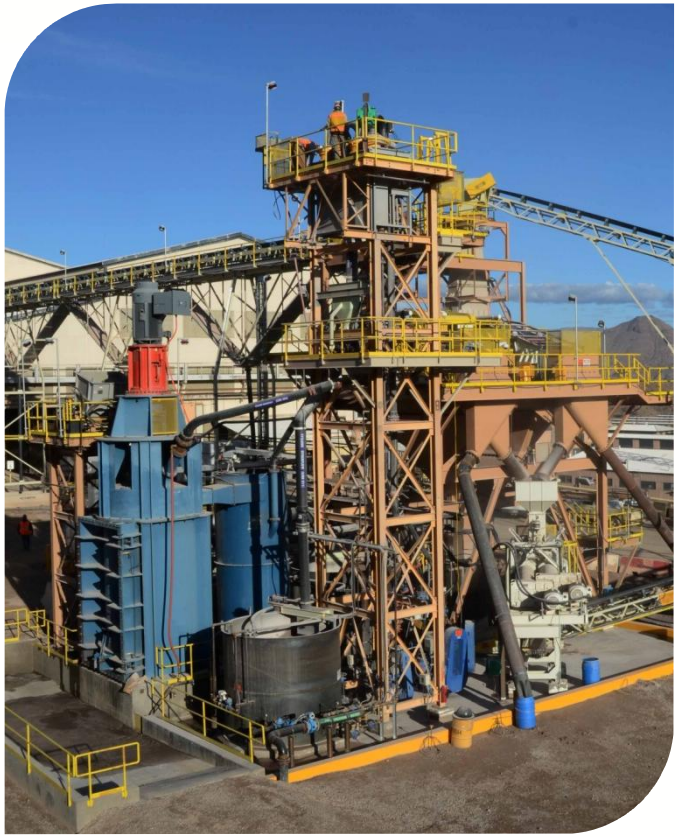

*through August 2013

Morenci Pilot Plant – Edge Effect Testing Series

A total of twelve (12) tests were completed, varying:

- Presence of flanges or cheek plates
- Relative wear of flanges/cheek plates
- HPGR specific force (N/mm^2)

For each test, the HPGR circuit was surveyed under steady state conditions, including fractional samples of the HRC discharge (edge, center, edge).

Morenci Pilot Plant – HPGR Circuit

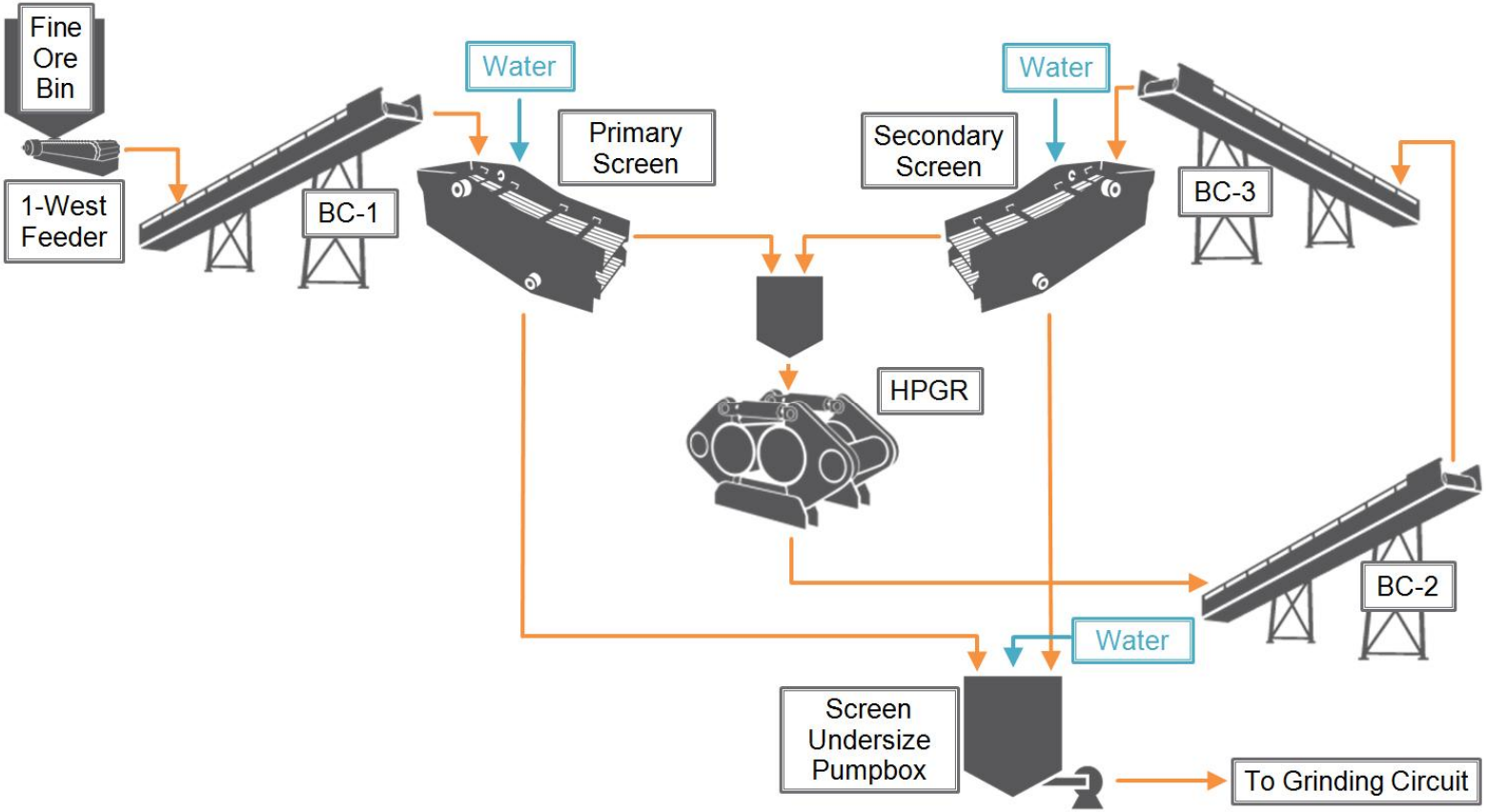

Edge Effect Testing – Sampling Points

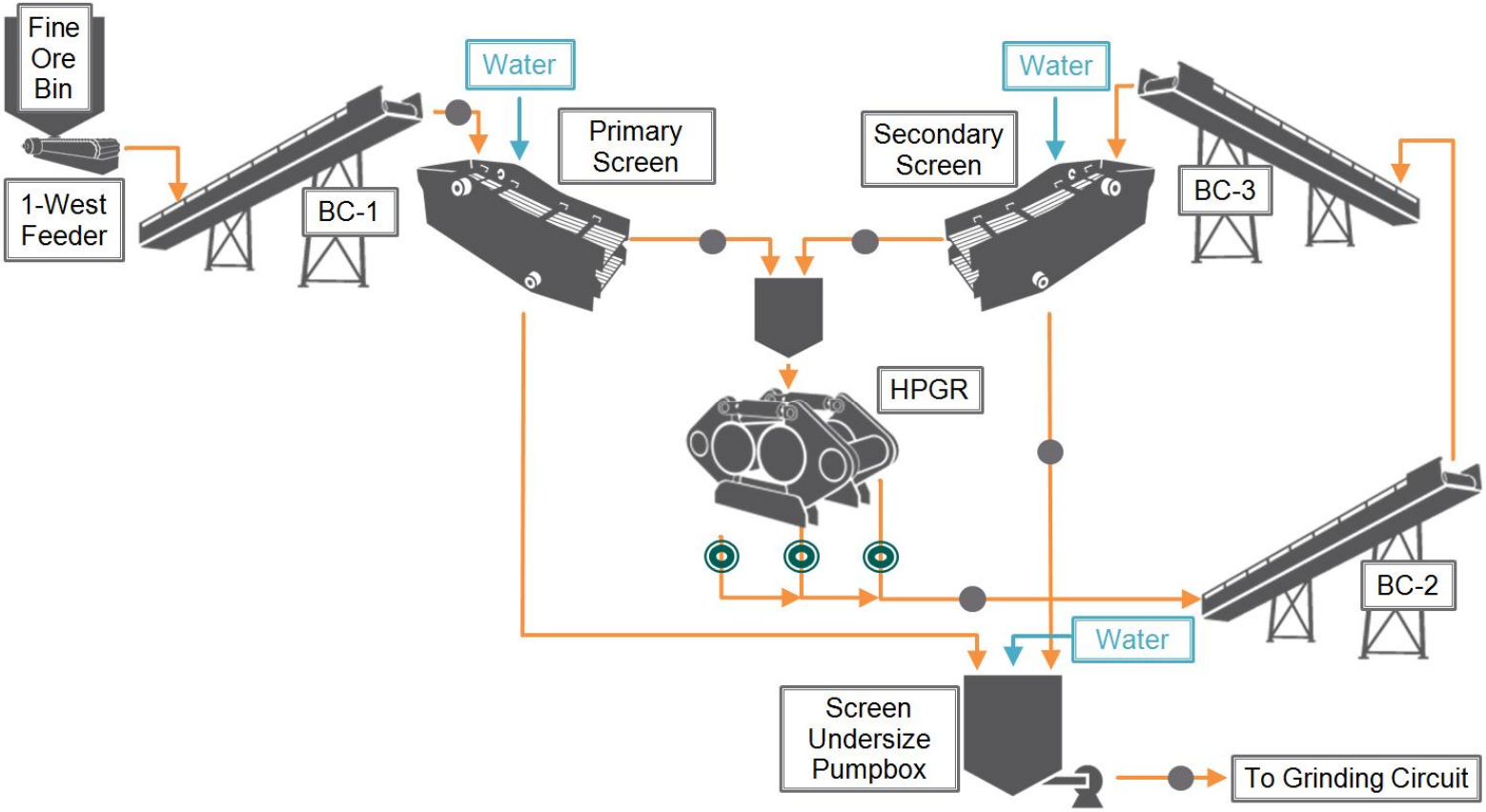

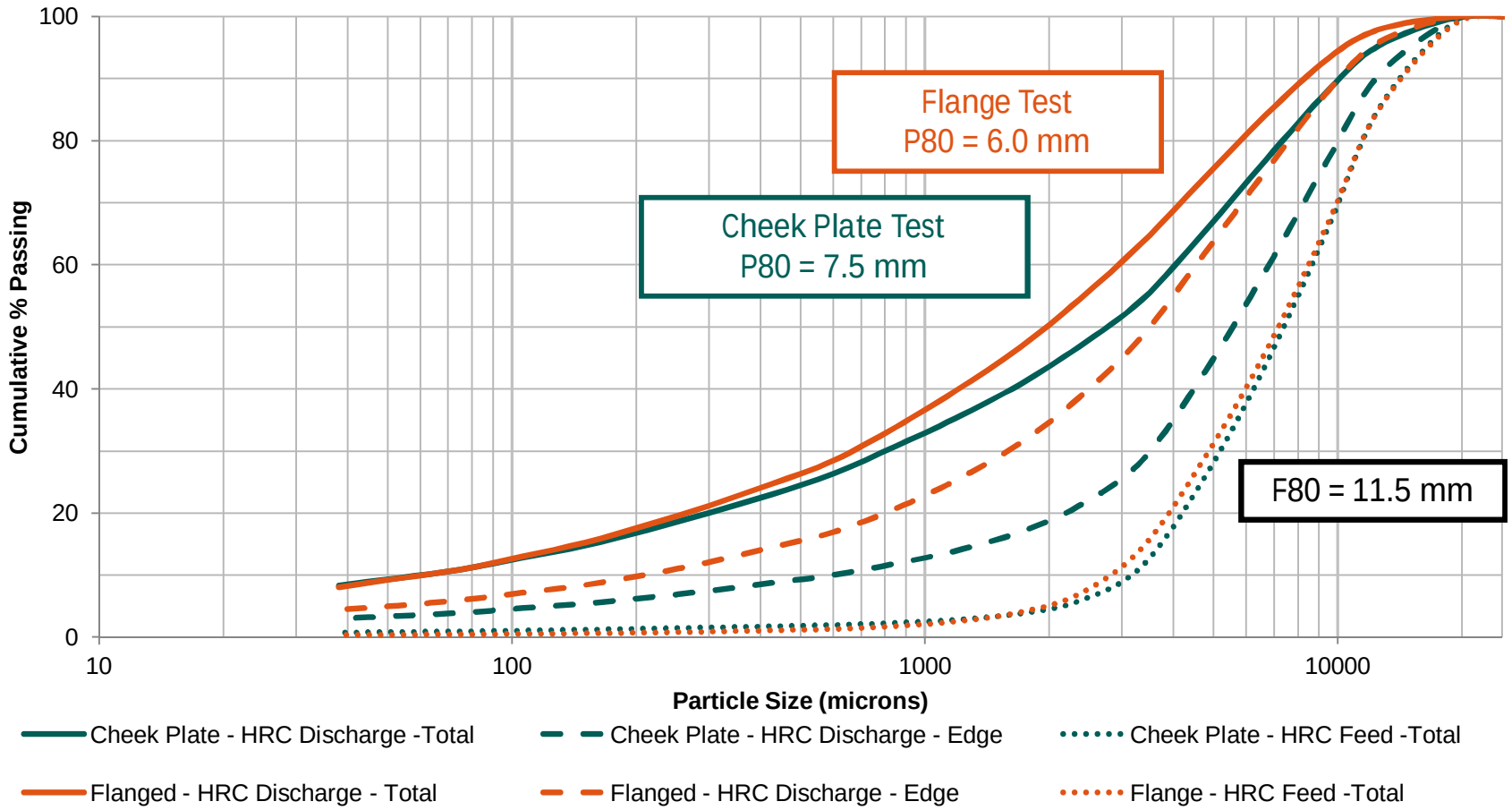
Flange Test
P80 = 6.0 mm
Cheek Plate Test
P80 = 7.5 mm
F80 = 11.5 mm
Cumulative % Passing
100
80
60
40
20
0
10
100
1000
10000
Particle Size (microns)
Cheek Plate - HRC Discharge -Total
Cheek Plate - HRC Discharge - Edge
Cheek Plate - HRC Feed -Total
Flanged - HRC Discharge - Total
Flanged - HRC Discharge - Edge
Flange - HRC Feed -Total

Test number	Test Z2B	Test Z8A	% change
Test description	Cheek plates - new	Flanges - new	
HPGR specific force (N/mm^2)	4.49	4.51	+0.3%
HPGR tire speed (RPM)	23.2	22.3	-3.7%
Plant feed tonnage (dry MTPH)	35.3	42.8	+21%
HPGR throughput (dry MTPH)	57.7	61.7	+6.9%
HPGR specific throughput ($t \cdot s/m^3 \cdot hr$)	216	240	+11%
HPGR net circuit specific energy (kW·hr/tonne)	3.04	2.72	-11%
Circulating load (%)	111%	87%	-22%
HPGR feed F80 (microns)	11,577	11,502	-0.7%
HPGR product P80 (microns)	7,491	6,004	-20%
HPGR circuit product P80 (microns)	1,700	1,697	-0.1%

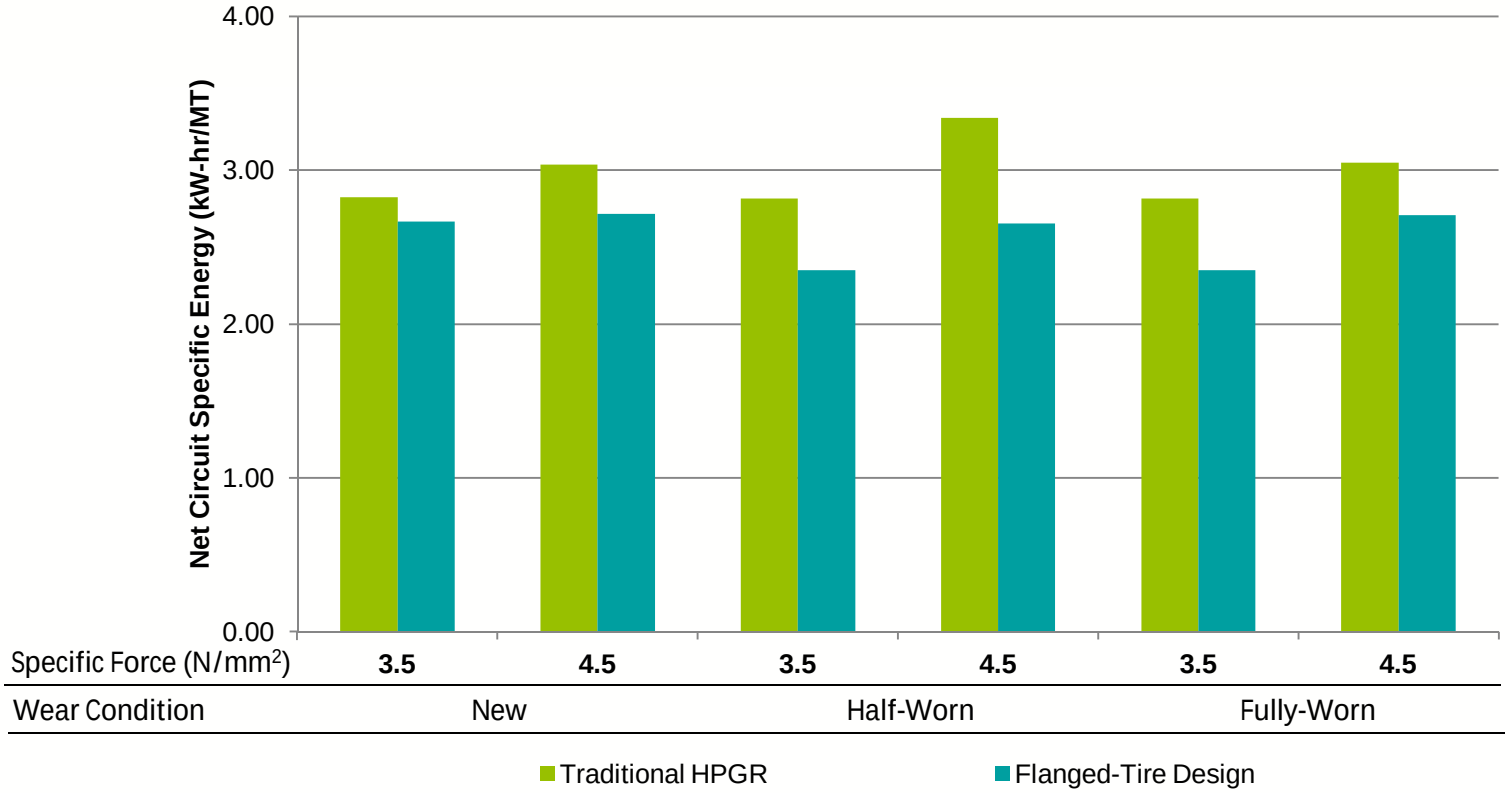
Net Circuit Specific Energy (kW-hr/MT)
4.00
3.00
2.00
1.00
0.00
Specific Force (N/mm²)
3.5
4.5
3.5
4.5
3.5
4.5
Wear Condition
New
Half-Worn
Fully-Worn
Traditional HPGR
Flanged-Tire Design

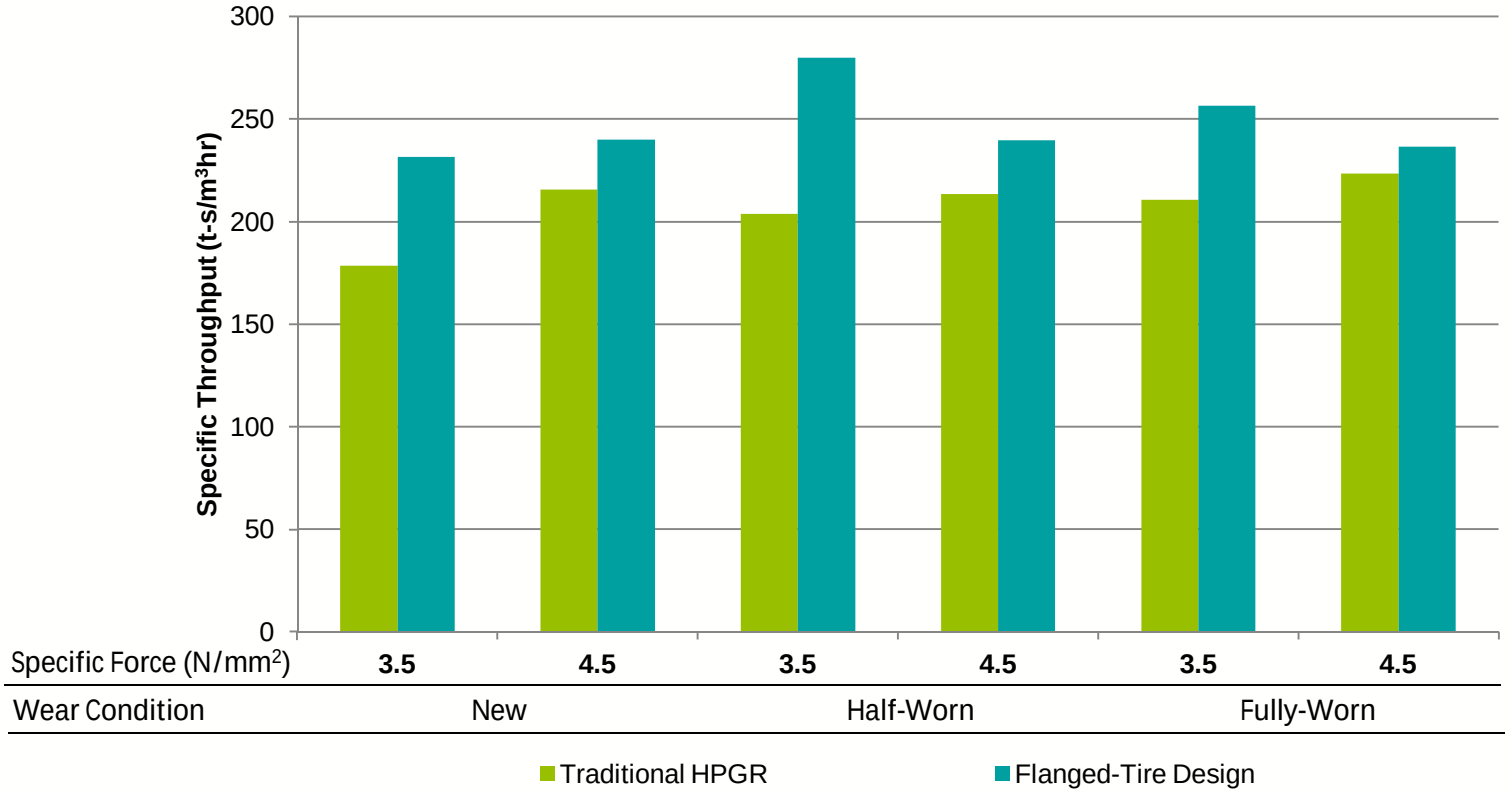
Specific Throughput (t-s/m³hr)
300
250
200
150
100
50
0
Specific Force (N/mm²)
3.5
4.5
3.5
4.5
3.5
4.5
Wear Condition
New
Half-Worn
Fully-Worn
Traditional HPGR
Flanged-Tire Design

Future Work

Additional work in this area includes:

- Normalize data across case study relative to feed ore properties
- Scale up of the flanges' performance on larger size units
- Incorporate these effects into computer models

In addition, future work will highlight the results from the various other aspects of the Morenci Pilot Plant testing program.

Conclusions

The presence of flanges has been shown to yield better particle breakage at the edges of the HPGR tire. At the 750mm diameter pilot scale, the flanged tire design has been shown to:

- Reduce specific energy by 13.6%
- Lower circulating load by 24%
- Increase the specific throughput by 19%

These results have significant implications for the design and operation of HPGR circuits.

Morenci Pilot Plant, Arizona, USA