Metso

Sala series

Vertical tank pumps

Industry benchmark in concentrate pumping efficiency





Vertical tank pumps

The Metso VT vertical tank pumps are designed for abrasive slurry service and feature simple maintenance and robust design. The ingenious design of the pump makes it exceptionally service friendly and easy to install.

Summary of design features

- Integrated unit for layout flexibility
- Smooth operation of open sump and vertical inlet which prevents air blocking
- Cantilever design without submerged bearings or shaft seals
- Bearing assembly with double protection sealing arrangement to prevent ingress of slurry
- Wear parts are available in a variety of different materials and are fully interchangeable
- Simplified maintenance features

Sala series: Vertical tank pumps

Smart design features lead to ease of installation and maintenance

Sala VT Series vertical tank pumps are made for abrasive slurries. Known for robust construction and durability, our vertical tank pumps are designed to be simple to maintain and easy to install.

Layout flexibility
The pump, pump sump and motor are integrated in one self-contained unit, so they are simple to install and connect with no alignment or special foundations needed.

Smooth operation
The open tank design with a vertical "wet end" inlet prevents air blocking by allowing entrained air to run up the shaft. These pumps can run dry.

Cantilever design
The heavy duty pump shaft is a cantilever design, hanging below the bearing housing. There are no submerged bearings, stuffing box or shaft seals. This design ensures minimal maintenance and eliminates any requirement for water flushing.

Bearing assembly
The pump shaft is carried in grease lubricated anti-friction bearings. Impeller clearance is maintained by external axial adjustment of the shaft/ bearing assembly. Bearings have double protection against ingress of slurry.

Impeller options
Two different impeller options are available: Semi open impeller Type O for smooth and blockage free operation and Closed impeller Type C which features high head and efficiency.



Flexible and reliable materials

Standard pumps are supplied with “wet end” parts in wear resistant Natural Rubber or Wear Resistant High Chrome Iron alloy, with a nominal hardness of 600 BHN).

Two different impeller configurations are available for optimum performance, the Type O (open) and the Type C (closed).

Other wear part materials available include the Metso range of Natural rubbers, Synthetic rubbers and Polyurethane.

The wear parts have large material sections for extra long wear life and are designed for the toughest applications.

Parts in different materials are fully interchangeable and can be combined for optimum life.

The pump can also be used as a mixing and distribution unit, where dry powder has to be mixed (and wetted) with water. It can also be used with cement in ready mixed concrete and for grouting and injection mixing.

Drive
Pumps are supplied with a V-belt drive, motor and drive guard. The motor is mounted vertically, with shaft up, on an adjustable motor plate fitted above the tank top, along side the bearing housing.



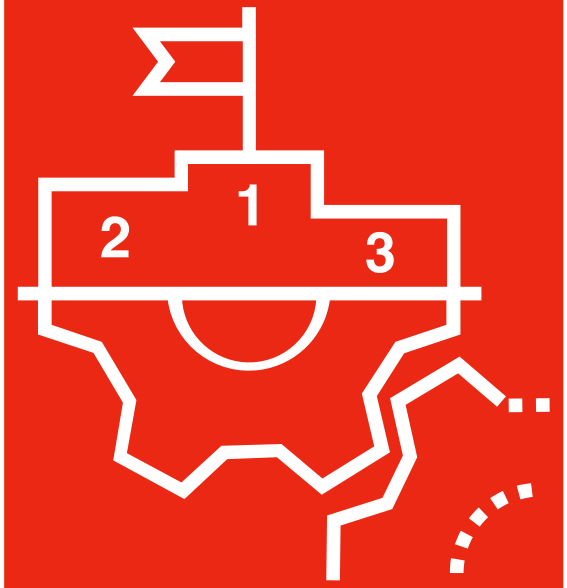

Increase the efficiency of your concentrate pumping



Smooth operation

The open tank design with a vertical “wet end” inlet prevents air blocking by allowing entrained air to run up the shaft.



Layout flexibility

The pump, pump sump and motor are integrated in one self-contained unit

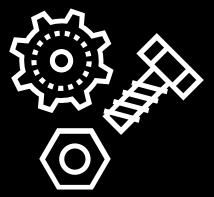

Bearing assembly

The pump shaft is carried in grease lubricated anti-friction bearings

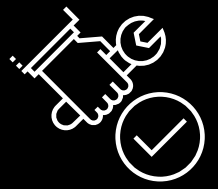

Cantilever design

The heavy duty pump shaft is a cantilever design, hanging below the bearing housing

Simplified maintenance

The casing on the VT tank pump is supported by a beam. The beam is either lowered by hand or a hydraulic jack, depending on the pump size. On larger pump sizes (VT 100 and upwards) the beam can be swung out so that the "wet end" parts can be accessed by a lifting device.

Options

- "Wet End" materials
- Open or closed impellers
- Rubber lined tank and shaft for wear protection
- All rubber lined acid duty version

Other pump products

- XR, HR, MR Rubber Lined Pumps
- XM, HM, MM Hard Metal Pumps
- VS, VSH, VSM Vertical Sump Pumps
- VF Vertical Froth Pumps

Typical installations

- Feed to dewatering cyclones in sand plants
- Screen underflow duties
- Sampling pumps in concentrators
- Permanent, mobile or semi-mobile installations in industrial applications
- Mixing/distribution units in applications for flocculent or lime in sewage plants or cement grouting in tunnels or mines.

Motor size

Motor size and V-belt drive vary with the pump application. Minimum data required for an approximate pump, speed and drive motor selection:

- Slurry flow rate
- Slurry density
- Total discharge head

Boost performance with flexible upper frame options

Our VT pump range is designed to deliver flexibility and performance for demanding applications. For selected VT sizes, you can choose between the standard VT and the VT HH (High Head version).

The VT HH is engineered for higher head applications, featuring:

- **Larger shaft and bearings**
  Enhanced strength and durability under high loads
- **Larger upper frame**
  To accommodate larger motors
- **Optimized bearing assembly**
  Handles radial loads and pushes critical speed beyond the operating range

With the same tank and wet end as the standard VT, the VT HH delivers enhanced capability without compromizing reliability. Perfect for applications where power and performance matter most.



When your application demands more, choose VT HH – the solution that works harder for you.

Sala series: Vertical tank pumps

Pump dimensions

Broad spectrum with the **smallest** VT pump weighing **90kg** and **0.95m tall**, while the **largest** is **2785kg** and stands at **3.2m tall**

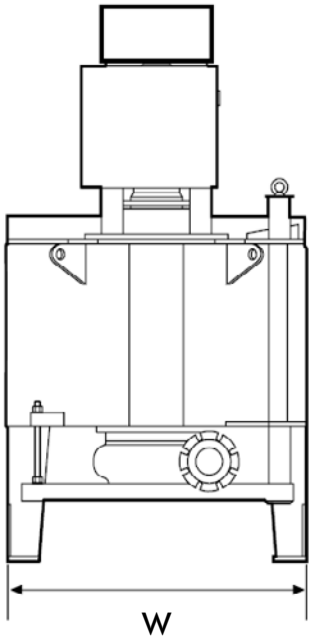

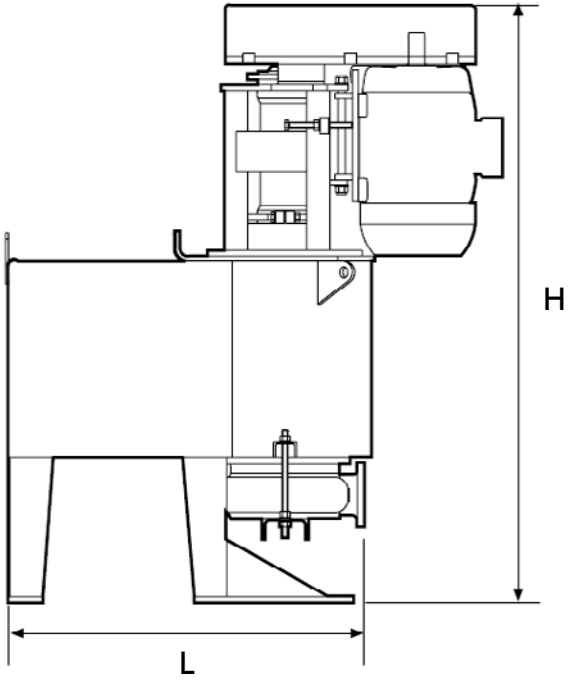

Technical specifications

	Pump size		Height		Length		Width		Weight*		Sump volume	
	mm	inch	mm	inch	mm	inch	mm	inch	kg	lb	m^3	USG
VT40 LAB	40	1.5	955	37.5	640	25	400	16	90	198	0.03	8
VT40	40	1.5	1 030	40.5	740	29	610	24	110	243	0.06	16
VT50	50	2	1 470	58	1 035	41	1 010	40	305	672	0.25	66
VT50 HH	50	2	1760	70	1465	58	1010	40	505	1112	0.25	66
VT80	80	3	1 880	74	1 015	40	1 060	42	580	1 279	0.33	87
VT100	100	4	2 050	81	1 225	48	1 100	43	825	1 819	0.57	150
VT150	150	6	2 160	85	1 285	50.5	1 100	43	925	2 039	0.57	150
VT200	200	8	3 105	122	1 710	67	1 510	59	2 655	5 853	1.26	333
VT250	250	10	3 105	122	1 760	69	1 510	59	2 785	6 140	1.26	333

* Weight figures are for metal parts. For rubber parts reduce weight by 10%.

VT vs VT HH

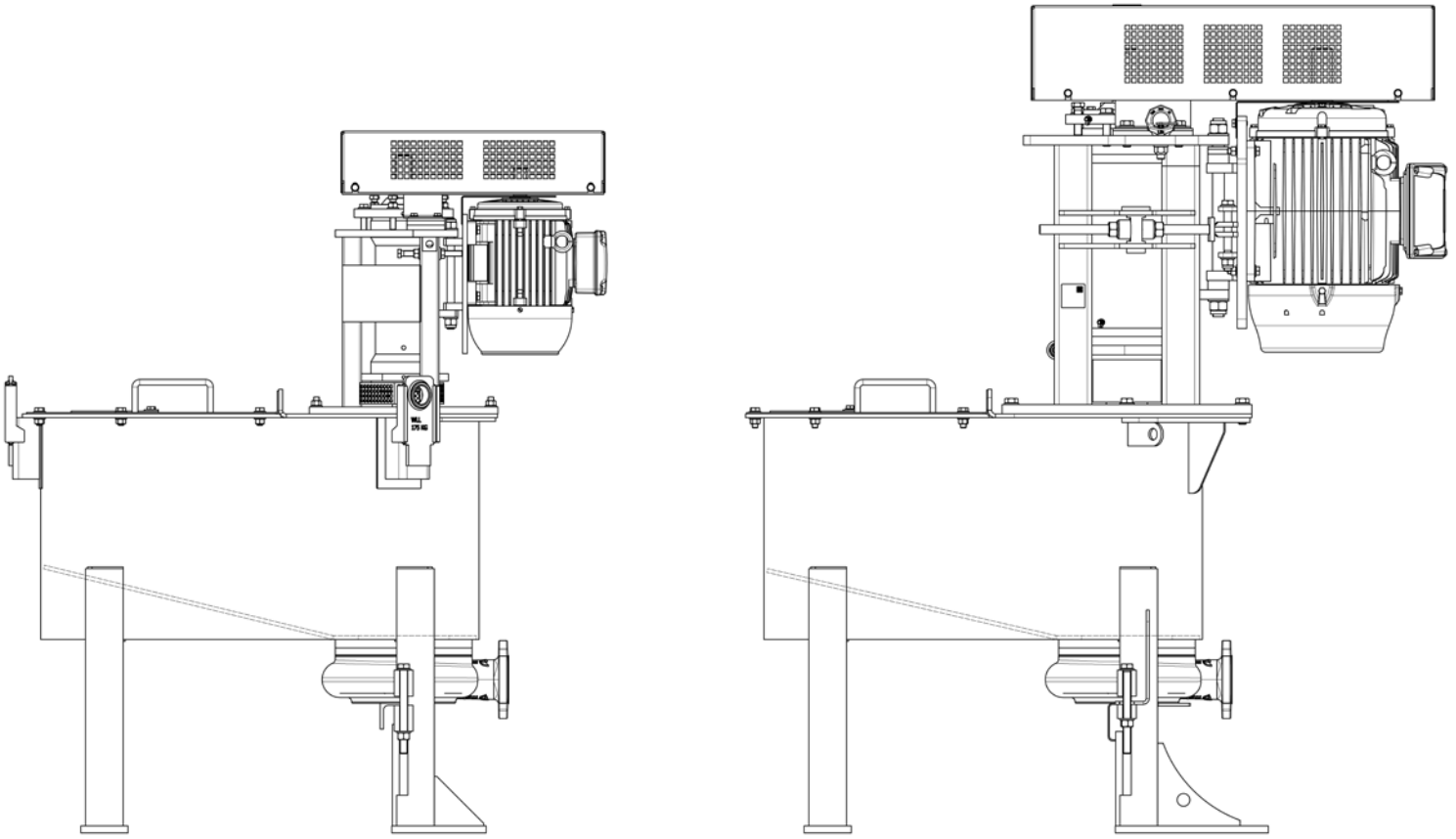

VT50 with frame VB to the left and VT50 HH with upper frame VC to the right

Metso is a frontrunner in providing sustainable technologies, end-to-end solutions and services for the aggregates, minerals processing and metals refining industries globally. By helping our customers increase their productivity, improve their energy and water efficiency and environmental performance with our process and product expertise, we are the **partner for positive change.**

metso.com

Visit the webpage here to learn more about the Sala series Vertical tank pumps:

Metso

© 2025 Metso Corporation. All trademarks and registered trademarks are the property of their respective owners. 4817-12-22-EN-MNG